Alexandrina Council
Heritage Fencing Details

Post and Rail (Quarter Turn)

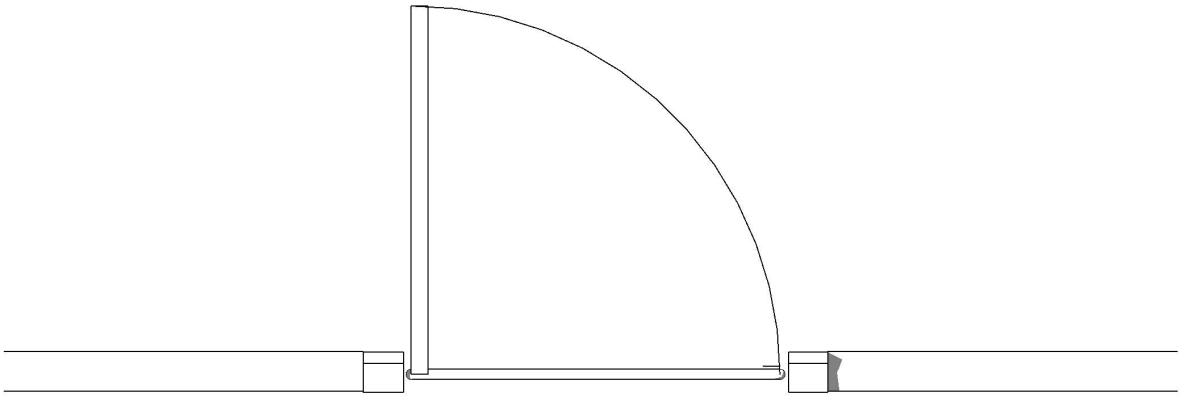

Quarter Turn Fence - Plan

1 : 20

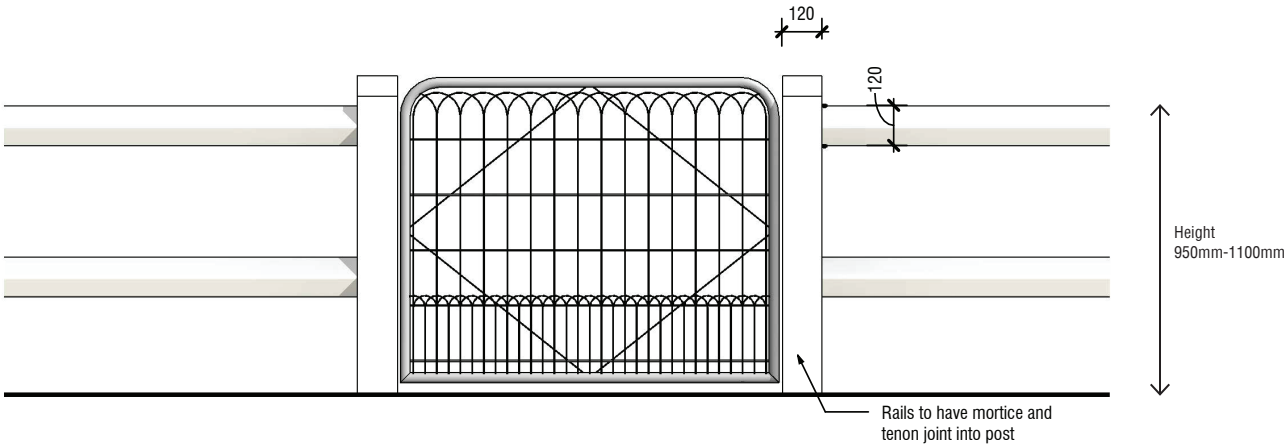

Quarter Turn Fence - Elevation

1 : 20

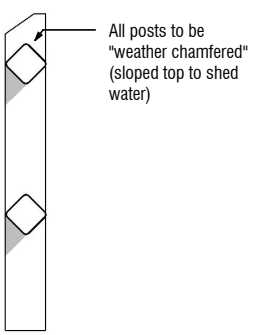



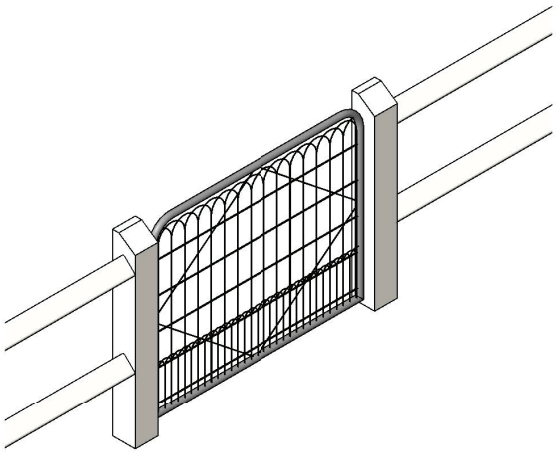

Quarter Turn Fence - Section

1 : 20

Quarter Turn Fence - 3D View